FibraFlow
Hollow Fiber Filter

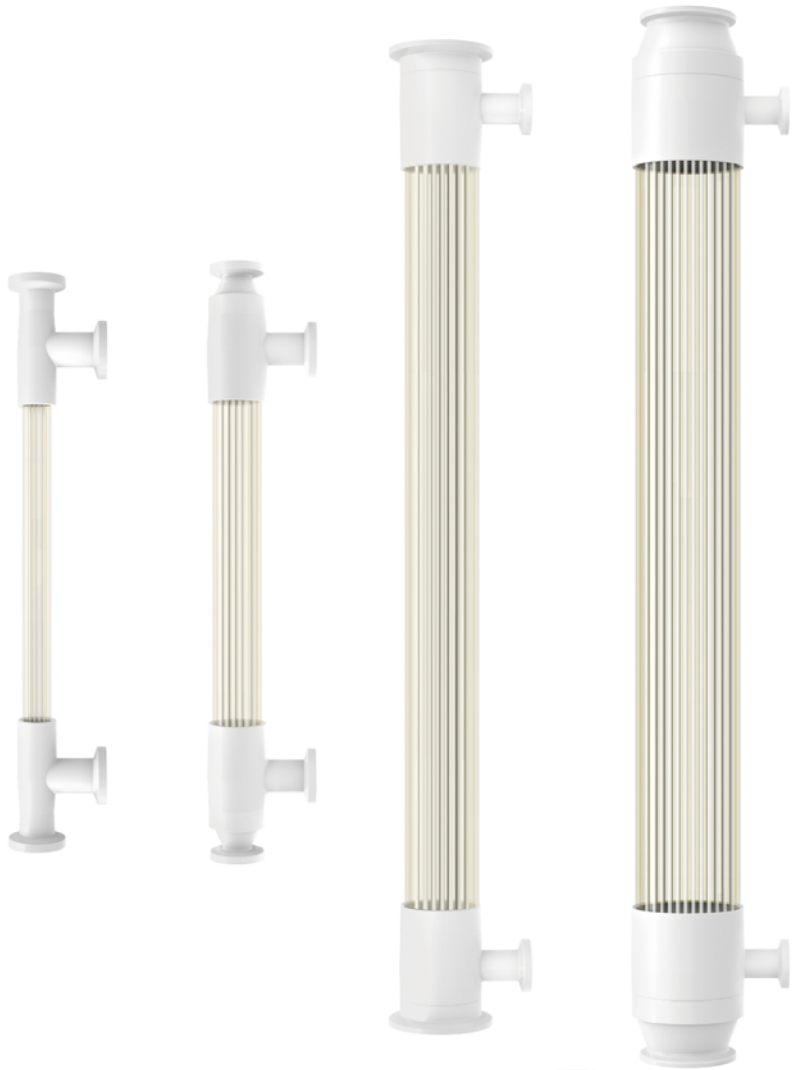

TFFS Hollow Fiber Filter

Filters developed by GVS are applicable to biopharmaceuticals, food processing, environmental engineering and other industries for the separation and production of pharmaceutical and biotechnological products, including but not limited to the applications listed below:

- Clarification: separation of cells/cell debris (cell harvesting and removal), plasmid impurity removal, recombinant collagen filtration
- Concentration: protein concentration by removing water/buffer solution
- Desalting and buffer exchange
- Buffer solution replacement, e.g. buffer system adjustment before and after chromatography
- Pyrogen removal, e.g. pyrogen elimination for traditional Chinese medicine injections
- Separation & purification: proteins, peptides, polysaccharides, viruses, viral particles, nucleic acids and antibodies

Material

- Membrane Material: PES
- Housing: Polysulfone
- Potting Material: Polyurethane/Epoxy Resin
- Gasket: Silicone/Fluoro Rubber
- Netting: Polypropylene
- Antifreeze/Bacteriostat(if wet): Glycerin/Ethanol/NaOH

Operating Constructions

Max.Inlet Pressure	0~45°C	3bar
	45°C~60°C	1.5bar
	60°C~80°C	0.5bar
Max.TMP	0~45°C	2bar
	45°C~60°C	1bar
	60°C~80°C	0.5bar
Max.Sterilization Temperature	85°C	
pH Range	1-14	

TFFS Product Drawings

1. Laboratory Grade (AA~AB/AS)

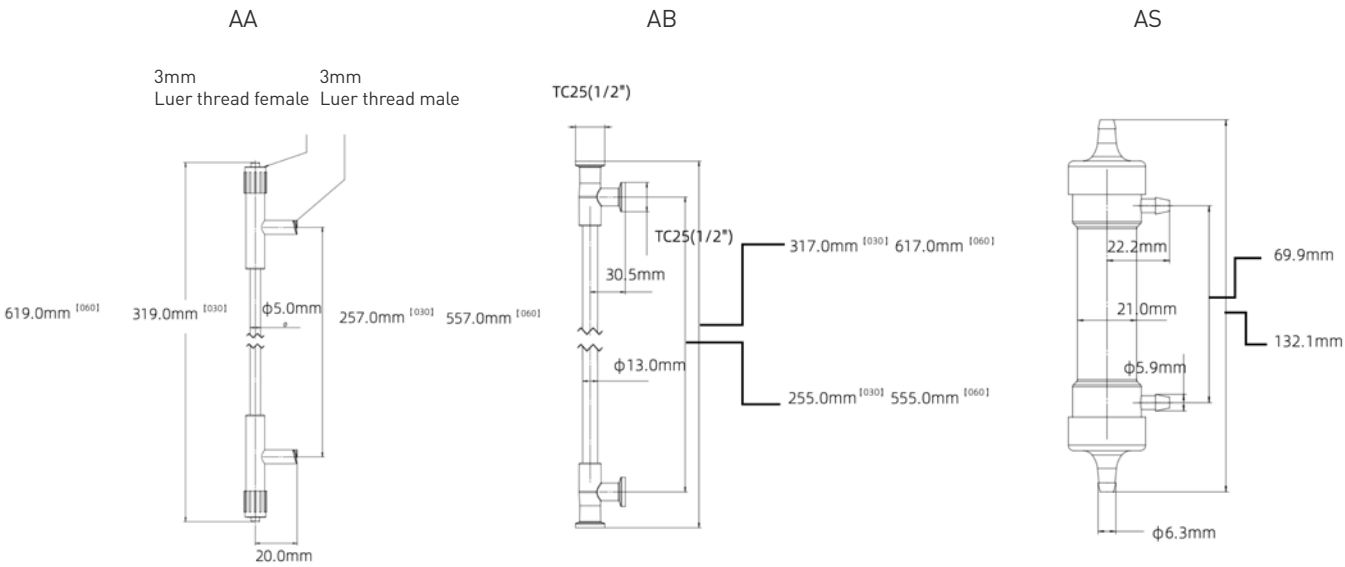

2. Pilot and Scale-up Grade (AC~AE)

AC

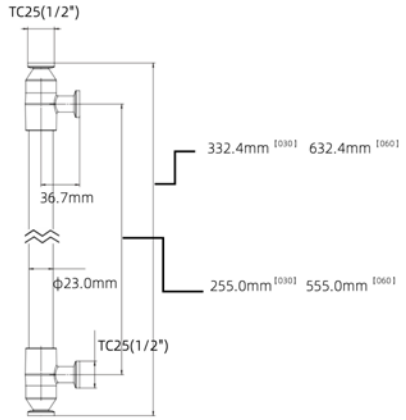

AD

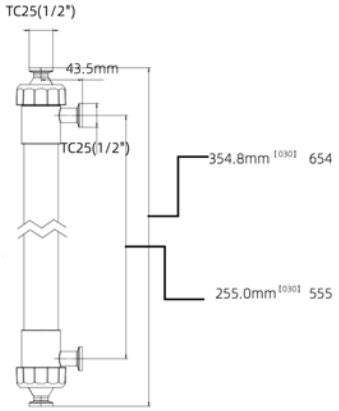

AE

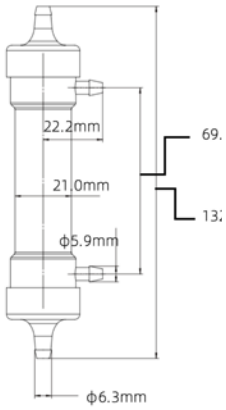

3. Production Grade (AF/AG/AM)

AF

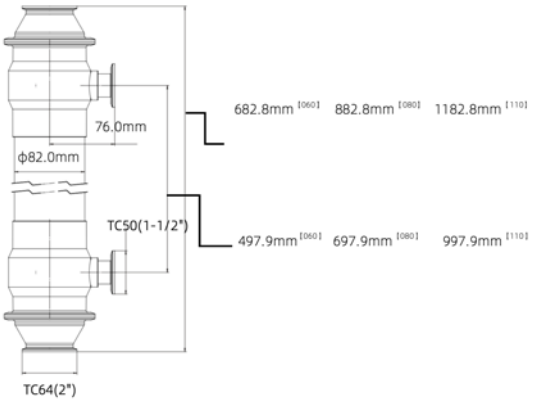

AG

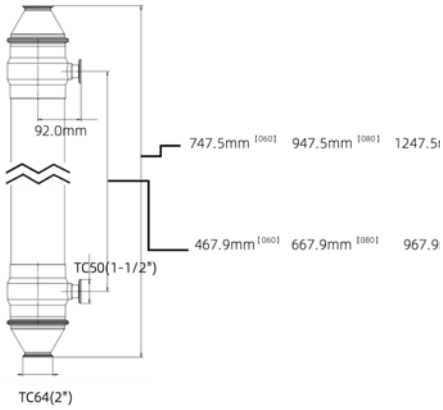

AM

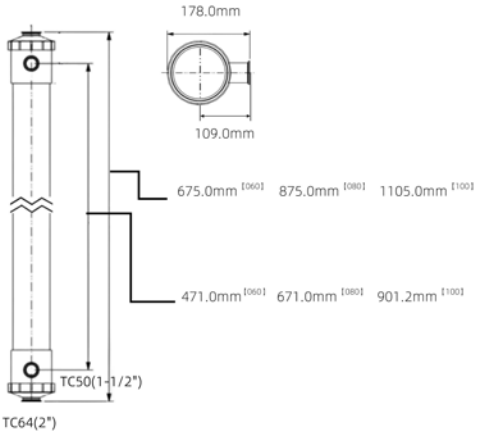

AG-Plus

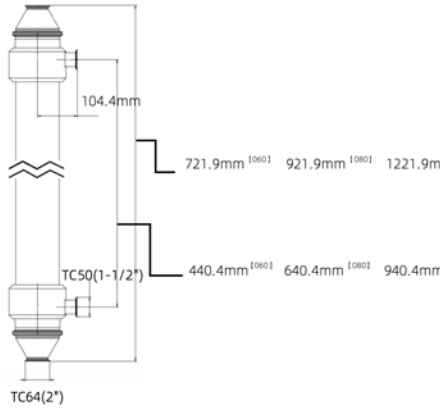

Product Information

Filter O.D	Channel Length	Membrane Area (m²)	Inlet / Retentate Port	Permeate Port
AS	010	0.02	-	-
AA	030	0.0005	3mm Female Luer	3mm Male Luer
	060	0.0015	3mm Female Luer	3mm Male Luer
AB	030	0.015	TC25(1/2")	TC25(1/2")
	060	0.03	TC25(1/2")	TC25(1/2")
AC	030	0.075	TC25(1/2")	TC25(1/2")
	060	0.15	TC25(1/2")	TC25(1/2")
AD	030	0.25	TC25(1/2")	TC25(1/2")
	060	0.50	TC25(1/2")	TC25(1/2")
AE	030	0.6	TC50(1-1/2")	TC25(1/2")
	060	1.2	TC50(1-1/2")	TC25(1/2")
AF	060	3.0	TC64(2")	TC50(1-1/2")
	080	4.0	TC64(2")	TC50(1-1/2")
	110	5.5	TC64(2")	TC50(1-1/2")
AG	060	6.0	TC64(2")	TC50(1-1/2")
	080	7.7	TC64(2")	TC50(1-1/2")
	110	11.0	TC64(2")	TC50(1-1/2")
AM	060	6.7	TC64(2")	TC50(1")
	080	8.9	TC64(2")	TC50(1")
	100	11.5	TC64(2")	TC50(1")

ORDERING INFORMATION								
Product Type	Membrane Type	Rating	Channel Length	Filter O.D	Filter I.D	Storage Condition	Version	Type
TFFS	S = PES	001=1kDa	001=1~099mm	AA=5mm	050=0.5mm	0G=Dry Storage	A=Steam Sterilizable	Z=Capsule
	F = PVDF	003=3kDa	010=100~199mm	AB=13mm	080=0.8mm	0S=Preservative Solution	N=Normal	L=Capsule with thread
		005=5kDa	030=300~399mm	AC=23mm	100=1.0mm		G=Gamma	D=Custom
		006=6kDa	060=600~699mm	AD=36mm	120=1.2mm			
		010=10kDa	080=800~899mm	AE=55mm				
		015=15kDa	100=1000~1099mm	AF=82mm				
		030=30kDa	110=1100~1199mm	AG=114mm				
		050=50kDa	120=1200~1299mm	AM=120mm				
		075=75kDa		AS=19mm				
		100=100kDa	*Nominal length					
		300=300kDa						
		500=500kDa						
		750=750kDa						
		10U=0.1μm						
		20U=0.2μm						
		45U=0.45μm						
		50U=0.5μm						

Important Notes:
1. Gamma Sterilization is only applicable for Dry storage.
2. Starting from AF outer diameter specification, Version N is unavailable.
3. For product customization and selection, please consult the GVS technical team first.

RTFS Hollow Fiber Filter

RTFS are repeatedly steam-sterilizable hollow fiber filter products developed by GVS. Engineered for steam sterilization conditions in pharmaceutical processes, they balance easy operation and process stability, fully meeting biopharmaceutical production requirements for hygiene standards and operational efficiency.

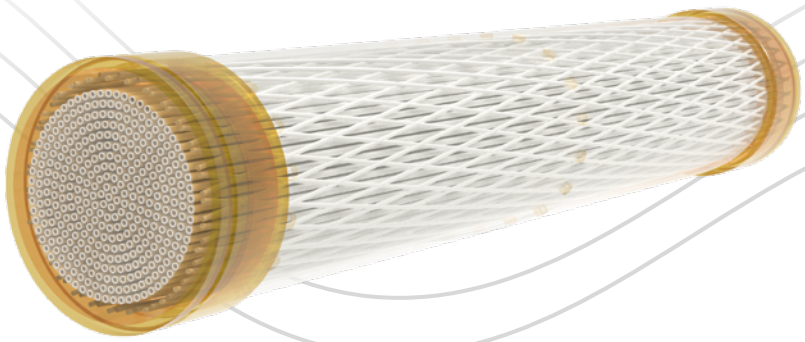

The filter housing is manufactured from medical-grade Polysulfone (PSU), featuring outstanding mechanical strength, temperature resistance and anti-creep performance. It reliably withstands high-temperature, high-pressure impacts and thermal cycling stress during in-situ steam sterilization, maintaining structural integrity after repeated long-term sterilization cycles.

Mounting dimensions and interface specifications are fully compatible with mainstream equivalent products available on the market. Matching O-rings for stainless steel housings are supplied to support direct replacement and lower customers' process adaptation costs.

Applications

- Cell perfusion culture
- Liposome filtration for small-molecule pharmaceuticals

Material of Constructions

- Membrane Material: PES(modified)
- Housing: PSU
- Potting Material: Polyurethane
- O-Ring: Silicone
- Netting: Polypropylene
- Antifreeze/Bacteriostat: Glycerin/NaOH

Membrane Features

The core filter membrane adopts modified Polyethersulfone (mPES). Precisely controlled membrane fabrication processes guarantee consistent filtration performance and structural stability. Rigorous verification confirms that key indicators including filtration performance and physicochemical properties remain highly consistent before and after steam sterilization, delivering excellent process reproducibility.

Ultrafiltration (UF) Series: Rating ranges from 1 kDa ~ 750 kDa; optional fiber inner diameters: 1.0 mm

Microfiltration (MF) Series: Rating from 0.1 μm ~ 0.5 μm; optional fiber inner diameters: 0.8 mm / 1.0 mm

Operating Conditions

Max.Inlet Pressure	0~45°C	3bar
	45°C~60°C	1.5bar
	60°C~80°C	0.5bar
Max.TMP	0~45°C	2bar
	45°C~60°C	1bar
	60°C~80°C	0.5bar
Max.Sterilization Temperature	125°C	
pH Range	1-14	

Technical Support

GVS capable of full-range product performance verification and process simulation testing. We deliver end-to-end technical services spanning selection matching, process scaling and commercial manufacturing, covering the complete workflow from pre-sales consultation to after-sales support.

Storage Options

- Ultrafiltration (UF) series adopts wet storage to ensure long-term stability of fiber performance.
- Microfiltration (MF) series is available in both wet storage and dry storage formats to accommodate customers' varied storage conditions and operational practices.

Quality Control

- Materials comply with USP Class VI biological safety requirements
- Manufactured within GMP Class 100,000 cleanrooms
- Fiber lots verified for precision, water flux and mechanical strength
- Every single filter undergoes 100% integrity testing prior to release

RTFS Product Drawings

1. Series R

RA

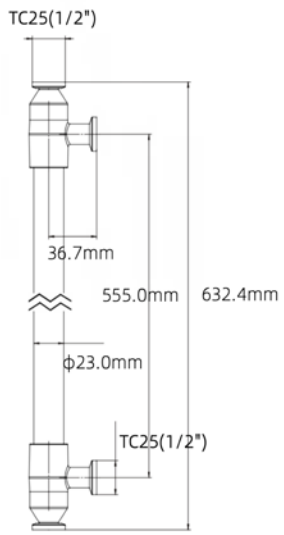

RB

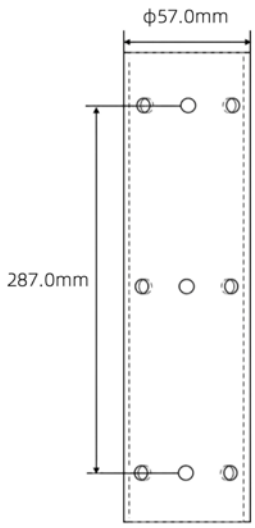

RC

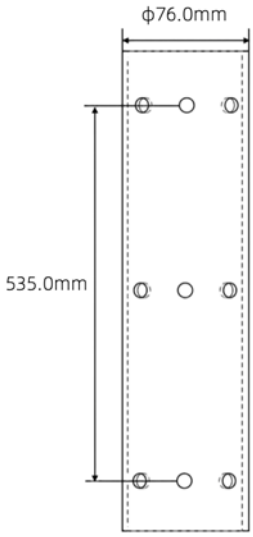

RD

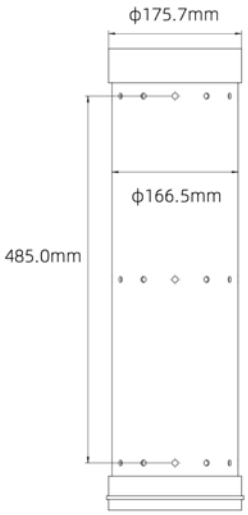

2. Series C

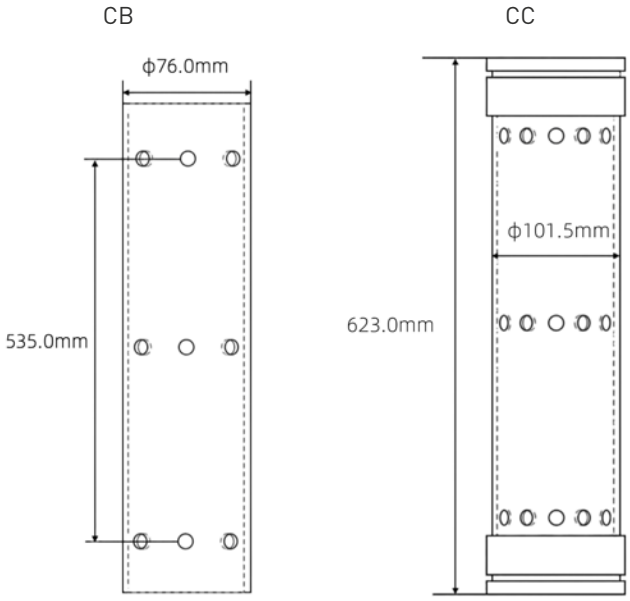

Product Information

Product Short Name	Product Code	Channel Length (mm)	Membrane Area (m²)	Fiber I.D (mm)	Compatible Reactor Volume	Matching Product
RTFS-RA	RTFS-S-XXX-060RA-XXX-XXAZ	600	0.13	0.8/1.0	2~10L	ATF2
RTFS-RB	RTFS-S-XXX-030RB-XXX-XXSX	300	0.77	0.8/1.0	10~50L	ATF4
RTFS-RC	RTFS-S-XXX-060RC-XXX-XXSX	600	2.53	0.8/1.0	50~200L	ATF6
RTFS-RD	RTFS-S-XXX-060RD-XXX-XXSX	600	11.0	0.8/1.0	200~1000L	ATF10
RTFS-060CB	RTFS-S-XXX-060CB-XXX-XXSX	600	0.21	0.8/1.0	-	55SMO
RTFS-060CC	RTFS-S-XXX-060CC-XXX-XXSX	600	0.42	0.8/1.0	-	65MSM

ORDERING INFORMATION								
Product Type	Membrane Type	Rating	Channel Length	Filter O.D	Filter I.D	Storage Condition	Version	Type
RTFS	S = PES	001=1kDa	030=300~399mm	RA=23.0mm Compatible with ATF2	080=0.8mm	0G=Dry Storage	A=Steam Sterilizable	Z=Capsule
		003=3kDa	060=600~699mm	RB=58.0mm Compatible with ATF4	100=1.0mm	0S=Preservative Solution	S=SIP	X=Cartridge
		005=5kDa	110=1100~1199mm	RC=76.0mm Compatible with ATF6				L=Capsule with thread
		006=6kDa	*Nominal length	RD=166.5mm Compatible with ATF10				D=Custom
		010=10kDa		CB=76.0mmCompatible with 55SMO				
		015=15kDa						
		030=30kDa		CC=101.5mm Compatible with 65MSM				
		050=50kDa						
		075=75kDa						
		100=100kDa						
		300=300kDa						
		500=500kDa						
		750=750kDa						
		10U=0.1μm						
		20U=0.2μm						
		45U=0.45μm						
		50U=0.5μm						

Important Notes:
1. Customizable channel length is not supported for certain models, including RA, RB, RC, RD, CB, CC, etc.
2. For product customization and selection, please consult the GVS technical team first.

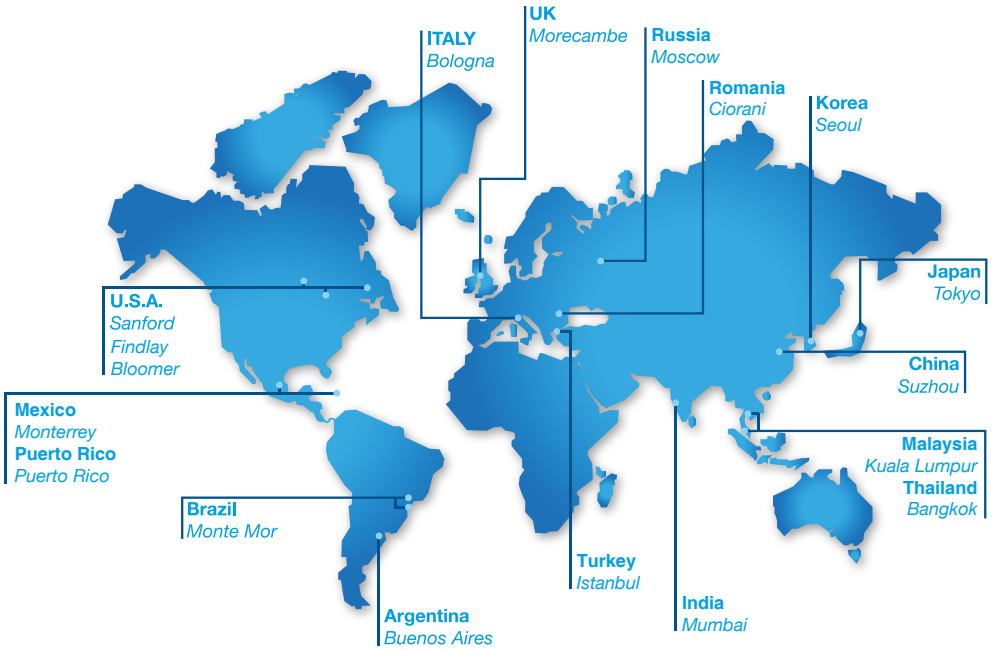

WORLDWIDE

EUROPE

Italy Office
Headquarters
GVS S.p.A.
Via Roma 50
40069 Zola Predosa (BO) - Italy
Tel. +39 051 6176311
gvs@gvs.com

Russia
GVS Russia LLC.
Profsoyuznaya Street, 25-A, office 102
117418, Moscow
Russian Federation (Russia)
Tel. +7 495 0045077
gvsrussia@gvs.com

United Kingdom
GVS Filter Technology UK Ltd.
Caton Road, Lancaster, Lancashire,
LA1 3PE, UK.
Tel. +44 (0) 1524 847600
gvsuk@gvs.com

Romania
GVS Microfiltrazione srl
Sat Ciorani de Sus 1E - Comuna Ciorani
Prahova România
Tel. (+40) 244 463044
gvsro@gvs.com

Turkey
GVS Türkiye
Nidakule Merdivenköy Mahallesi
Bora Sokak No:1 Kat:7 - 34732 Istanbul
Tel. +90 216 504 47 67
gvsturkey@gvs.com

ASIA

China
GVS Technology (Suzhou) Co., Ltd.
No.8 Taishan Road,215129
Suzhou New District, Suzhou, Jiangsu, China
Tel. +86 512 6661 9880
lifesciences.cn@gvs.com

GVS Shanghai Transfusion Technology Co., Ltd.
No.500 Youdong Rd
40069 Shanghai, China
Tel. +86 21 3415 3961

Japan
GVS Japan K.K.
KKD Building 4F, 7-10-12 Nishishinjuku
Shinjuku-ku, Tokyo 160-0023 Japan
Tel. +81 3 5937 1447
gvsjapan@gvs.com

Korea
GVS Korea Ltd
#315 Bricks Tower
368 Gyungchun-ro(Gaun-dong),
Namyangju-si, Gyunggi-do,
Tel: +82 31 563 9873
gvskorea@gvs.com

India
GVS Filter India Pvt Ltd
Unit No 35 & 36 on First Floor
Ratna Jyot Industrial Premises Irla Lane,
Irla Vile Parle, Mumbai 400056, India
gvsindia@gvs.com

Malaysia
GVS Filtration Sdn.Bhd
Lot No 10F-2B, 10th Floor, Tower 5 @ PFCC
Jalan Puteri 1/2, Bandar Puteri
47100 Puchong, Selangor, Malaysia
Tel: +60 3 7800 0062
gvsmalaysia@gvs.com

Thailand
GVS Thailand
88 Ratchadaphisek Rd,
Office 10E03 - Khlong Toei,
Bangkok 10110
gvsthailand@gvs.com

AMERICA

U.S.A.
GVS North America
63 Community Drive
Sanford, ME 04073 - USA
Tel. +1 866 7361250
gvsusa@gvs.com

GVS Filtration Inc.
2150 Industrial Drive
Findlay, OH. 45840 - USA
Tel. +1.419.423.9040
gvsfiltration@gvs.com

2200 W 20th Avenue
Bloomer, WI 54724 - USA
Tel. +1.715.568.5944
gvsfiltration@gvs.com

Puerto Rico
GVS Puerto Rico, LLC
98 Carr 194 - Fajardo,
Puerto Rico, 00738-2988, USA
Tel. +1.787.355.4100
gvspuertorico@gvs.com

México
GVS Filter Technology de Mexico
Universal No. 550, Vynmsa Aeropuerto Apodaca Industrial Park, Ciudad Apodaca, Nuevo León, C.P. 66626 - México
Tel. +52 81 2282 9003
gvsmex@gvs.com

Argentina
GVS Argentina S.A.
Avenida Rivadavia 13.332
1704 Ramos Mejía,
Buenos Aires - Argentina
Tel. + 5411 48614750
lifesciences.ar@gvs.com

Brazil
GVS do Brasil Ltda.
Rodovia Conego Cyriaco Scaranello Pires 251
Jardim Chapadão, CEP 13193-580
Monte Mor (SP) - Brasil
Tel. +55 19 38797200
gvs@gvs.com.br

PRODUCT COLLECTION - Hollow Fiber Filter
Copyright © 2026 GVS ® S.p.A.
All Right Reserved - Printed in Italy
Printing History: Version 12082026

While every precaution has been taken in the preparation of this catalog, data are subject to change without notice. Results in specific application of GVS products may vary according to the conditions and applications. GVS assumes no responsability for demage resulting from incorrect use of our products.